Drawing Number & Size	7217 (D)	Rev.	0
Owner	ch.prodeng	Year	2015
Product Line	RWGV		
Description	4"-12" 350 PSI RWGV PIV ASSEMBLY W/ POST INDICATOR SHOWN		
Part Numbers	7217		
Sizes	4", 6", 8", 10", 12"		
ECOs	1693152		
Key Words	4"-12" 350 PSI RWGV PIV ASSEMBLY W/ POST INDICATOR SHOWN		
Material	NOTED		
Project Number	N/A		

4IN - 12IN MUELLER RESILIENT WEDGE GATE VALVE - P2361 350 PSI - FLG x FLG - FLG x MJ - FLG x SLP - SLP x SLP W/POST INDICATOR SHOWN

ORDER LENGTH			
POST TYPE	D1 4"-12" SIZES MIN/MAX	D2 4" SIZE" MIN/MAX	D3 4" SIZE MIN/MAX
A	17.25 / 39.25	28.22 / 50.54	64.97 / 87.20
B	36.00 / 60.25	46.97 / 71.22	83.72 / 107.97
C	57.00 / 81.25	67.97 / 92.22	104.72 / 128.97
D	78.00 / 102.25	88.97 / 113.22	125.72 / 149.97
E	99.00 / 123.25	109.97 / 134.22	146.72 / 170.97
F	120.00 / 144.25	130.97 / 155.22	167.72 / 191.97

POST TYPE	D2 6" SIZE" MIN/MAX	D3 6" SIZE MIN/MAX
A	32.13 / 54.13	68.88 / 90.88
B	50.88 / 75.13	87.63 / 111.88
C	71.88 / 96.13	108.63 / 132.88
D	92.88 / 117.13	129.63 / 153.88
E	113.88 / 138.13	150.63 / 174.88
F	134.88 / 159.13	171.63 / 195.88

POST TYPE	D2 8" SIZE" MIN/MAX	D3 8" SIZE MIN/MAX
A	33.55 / 55.55	70.30 / 92.30
B	52.30 / 76.55	89.05 / 113.30
C	73.30 / 97.55	110.05 134.30
D	94.30 / 118.55	131.05 / 155.30
E	115.30 / 139.55	152.05 / 176.30
F	136.30 / 160.55	173.05 / 197.30

POST TYPE	D2 10" SIZE" MIN/MAX	D3 10" SIZE MIN/MAX
A	39.59 / 61.59	76.34 / 98.34
B	58.64 / 82.59	95.39 / 119.34
C	79.34 / 103.59	116.09 / 140.34
D	100.34 / 124.59	137.09 / 161.34
E	121.34 / 145.59	158.09 / 182.34
F	142.34 / 166.59	179.09 / 203.34

POST TYPE	D2 12" SIZE MIN/MAX	D3 12" SIZE MIN/MAX
A	41.83 / 63.83	78.58 / 100.58
B	60.58 / 84.83	97.33 / 121.58
C	81.58 / 105.83	118.33 / 142.58
D	102.58 / 126.83	139.33 / 163.58
E	123.58 / 147.83	160.33 / 184.58
F	144.58 / 168.83	181.33 / 205.58

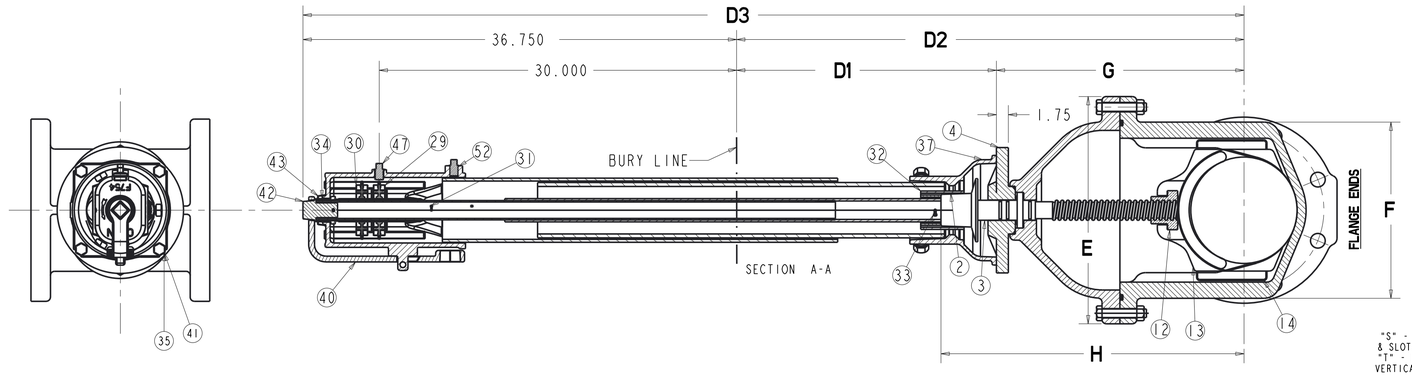

PARTS LIST					
ITEM	DESCRIPTION	REQ'D	MATERIAL	ASTM	
1	CAP SCREW	1	304 STAINLESS STEEL	A193	GROUP 1-CW
2	WRENCH NUT	1	DUCTILE IRON	A536	
3	STEM	1	BRONZE	B138	ALLOY C67600
4	STUFFING BOX	1	DUCTILE IRON	A536	
5	STUFFING BOX BOLTS STUFFING BOX NUTS	2 2	304 STAINLESS STEEL 304 STAINLESS STEEL	A193 A194	GROUP 1-CW GROUP 1-CW
6	O-RING	3	RUBBER	D2000	R34
7	O-RING	1	RUBBER	D2000	R34
8	ANTI-FRICTION WASHER	2	ACETAL		M90
9	BONNET	1	DUCTILE IRON	A536	
10	BONNET BOLTS BONNET NUTS	"P"	304 STAINLESS STEEL 304 STAINLESS STEEL	A193 A194	GROUP 1-CW GROUP 1-CW
11	BONNET GASKET (O-RING)	1	RUBBER	D2000	R34
12	DISC NUT	1	BRONZE	B584	C89833
13	DISC	1	SEE NOTE 1		
14	GUIDE CAP	2	ACETAL		M90
15	BODY (FLG x FLG)	1	DUCTILE IRON	A536	
16	BODY - FLG X MJ ENDS	1	DUCTILE IRON	A536	
17	BODY - FLG X SLP ENDS	1	DUCTILE IRON	A536	
18	BODY - SLP ENDS	1	DUCTILE IRON	A536	

P.I.V. PARTS LIST				
ITEM	DESCRIPTION	MATERIAL	ASTM	REQ'D
29	SHUT TARGET	PLASTIC-ZYTEL		1
30	OPEN TARGET	PLASTIC-ZYTEL		1
31	COTTER PIN (SHORT)	BRASS	B21	1
32	COUPLING	STEEL	A500 GR.B	1
33	COTTER PIN (LONG)	BRASS	B21	2
34	RETAINING RING	STAINLESS	AISI 302	1
35	HEX BOLT	304 STAINLESS STEEL	A193 - GRADE B8	4
36	WASHER (NOT SHOWN)	STEE/ZINC PLATED		1
37	BELL	CAST IRON (SEE NOTE 2)	A126 CL.B	1
38	EYE BOLT (NOT SHOWN)	STEEL/ZINC PLATED		1
39	HEX NUT (NOT SHOWN)	STEEL/ZINC PLATED	A563 GR.A	1
40	WRENCH	DUCTILE IRON	A536 GR.65-45-12	1
41	HEX NUT	304 STAINLESS STEEL	F594 - GROUP 1	4
42	OPERATING NUT	DUCTILE IRON	A536 GR.65-45-12	1
43	CAP	POLYPROPYLENE		1
44	SPRING PIN	STAINLESS	AISI 420	1
45	THREADED SLEEVE	PLASTIC-ZYTEL		1
46	UPPER STEM	STEEL	A513	1
47	PIPE PLUG- HEX SOCKET	STEEL		1
48	POST HEAD	CAST IRON	A126 CL.B	1
49	WINDOW	PLEXIGLASS		2
50	HEX HEAD SCREW	PLASTIC-ZYTEL	A.07 GR.A	5
51	LOWER STEM	STEEL	A500 GR.B	1
52	SOCKET HEAD SET SCREW	STEEL	AISI B18.3	1
53	COUPLING INSERT	STEEL	A500 GR.B	1
54	WINDOW GASKET	SYNTHETIC RUBBER		2
55	SHIPPING DISC (NOT SHOWN)	PRESSBOARD		1
56	WASHER (NOT SHOWN)	STAINLESS	AISI 304	1
57	UPPER BARREL	STEEL	A GR.B	1
58	LOWER BARREL	PVC	DR14 UL LISTED	1
59	METAL TAG	STAINLESS	304	1

1. RUBBER ENCAPSULATED DUCTILE IRON DISC
   DUCTILE IRON - ASTM A536
   RUBBER - SBR ASTM D2000
   MUELLER SPEC R88

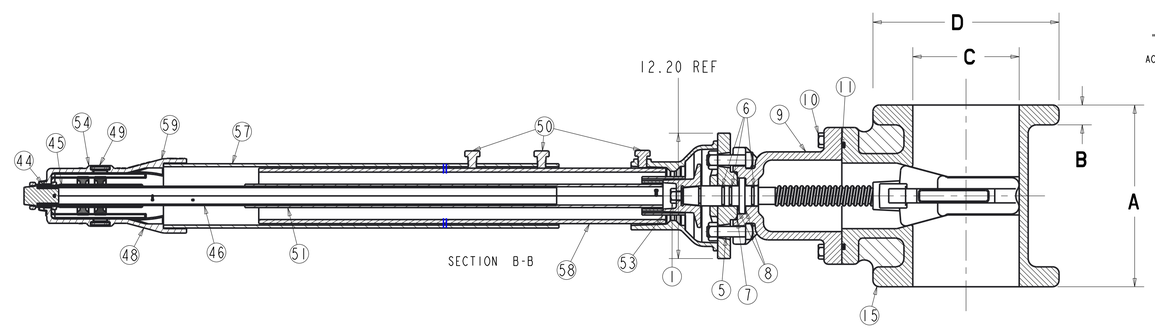

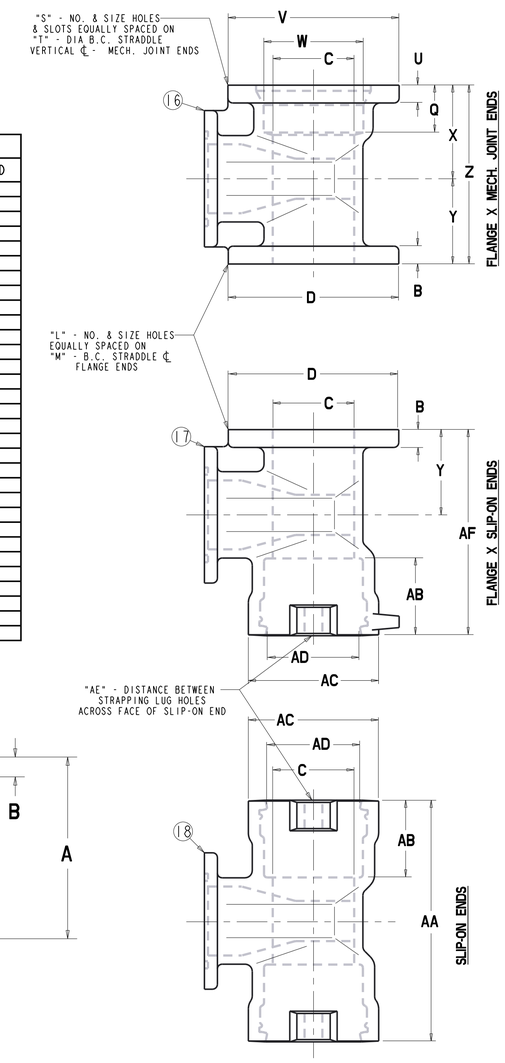

VALVE SIZE	A	B	C	D	E	F	G	H	L	M	P	Q	S	T	U	V	W	X	Y	Z	AA	AB	AC	AD	AE	AF	TURNS TO OPEN
4	9.00	.94	4.30	9.00	10.79	8.25	10.95	14.76	8 - 0.75	7.50	4	2.50	4 - .88	7.50	1.00	9.12	4.90	5.00	4.50	9.50	12.81	4.12	6.88	4.92	8.62	10.91	14
6	10.50	1.06	6.30	11.00	13.50	10.50	14.91	18.55	8 - 0.88	9.50	6	2.50	6 - .88	9.50	1.09	11.12	7.00	5.81	5.25	11.06	14.96	4.38	9.12	7.02	10.62	12.73	20.5
8	11.50	1.19	8.30	13.50	16.36	13.21	18.02	21.97	8 - 0.88	11.75	6	2.50	6 - .88	11.75	1.18	13.37	9.15	6.34	5.75	12.09	17.94	5.62	11.38	9.30	13.12	14.72	26.5
10	13.00	1.25	10.30	16.00	19.99	16.48	21.62	25.44	12 - 1.00	14.25	8	2.50	8 - .88	14.00	1.25	15.62	11.20	7.44	6.50	13.94	18.50	5.62	13.50	11.38	16.38	15.75	33
12	14.00	1.31	12.30	19.00	21.00	16.83	24.52	28.43	12 - 1.00	17.00	8	2.50	8 - .88	16.25	1.31	17.88	13.30	7.50	7.00	14.50	18.70	5.62	15.75	13.33	18.12	16.35	38.5

QRWIFH=
XOZLP HQRWLIIPDWIRQ
UHTXLUHG HERU
DOOHFKDQJHV

##################### X HOOHUHFR Q IIG HQ WIDO
#
WIWOHHWR HDQ G HR Z Q HUVK IBHR IHWK IVHHQ J IQ HHUIQ J HG DWD
UHP DIQ VHHQ HP X HOOHUHFR HQ R HK VHHDVHWR HEHHP DG H
R IHWK IVHG DWD HH [P HSWHDVHWSHP IIIP DOO\HDX WK R UI] HG
E\HP X HOOHUHFR HDVVHQ WHR Q HWK HHEDUHWR IHUHP IBHQ WV
WR HWK HVHHFR Q G IWER Q VHDWHSUHVX P HG 1

ECO 693152

APPROVED
By Jason W. Bradley at 2:59 pm, Apr 01, 2015

DR BY	AO	04/01/15	UNLESS OTHERWISE NOTED	THIRD ANGLE PROJECTION	C.B. NO.
CHKR	BB	04/01/15	BREAK CAST CORNER(S)		
ENGR	JWB	04/01/15	BREAK MACH CORNER(S)	PUNCH. NO	FINISH ASSY
MGR			TOLERANCES	REF. NO.	SCALE NONE
MFG			UNLESS OTHERWISE NOTED		PATT. NO.
TOOL			LINEAR ± / ANGULAR ±	STK. NO.	
FDRY					
MAT'L	NOTED				

Mueller Co.

DESCR. 4IN - 12IN RWGV - P2361 - 350 PSI W/POST INDICATOR FLANGE SHOWN

NUMBER 7217

7217

MUELLER CONFIDENTIAL: TITLE TO AND OWNERSHIP OF THIS ENGINEERING DATA REMAINS IN MUELLER COMPANY. NO USE IS TO BE MADE OF THIS DATA EXCEPT AS SPECIFICALLY AUTHORIZED BY MUELLER COMPANY. ASSENT ON THE PART OF THE RECIPIENTS TO THESE CONDITIONS IS PRESUMED.