No.	QTY	DESCRIPTION	MATERIAL
1	1	STEM	CAST LOW LEAD BRASS ALLOY
2	2	O-RING	EPDM ASTM D2000
3	1	BALL	CAST LOW LEAD BRASS ALLOY
4	2	GASKET - SEAL	NITRILE ASTM D2000
5	1	BODY	CAST LOW LEAD BRASS ALLOY
6	2	O-RING	EPDM ASTM D2000
7	1	END PIECE	CAST LOW LEAD BRASS ALLOY
8	1	END PIECE	CAST LOW LEAD BRASS ALLOY

No.	QTY	DESCRIPTION	MATERIAL
9	1	COMP GSKT	NITRILE ASTM D2000
10	1	WASHER	POLYPROPYLENE
11	1	CPLG NUT	CAST BRASS ASTM B62 ALLOY C83600
12	1	CAP	CAST BRASS ASTM B62 ALLOY C83600
13	1	ROLLPIN	ASTM A240 (302) STAINLESS STEEL

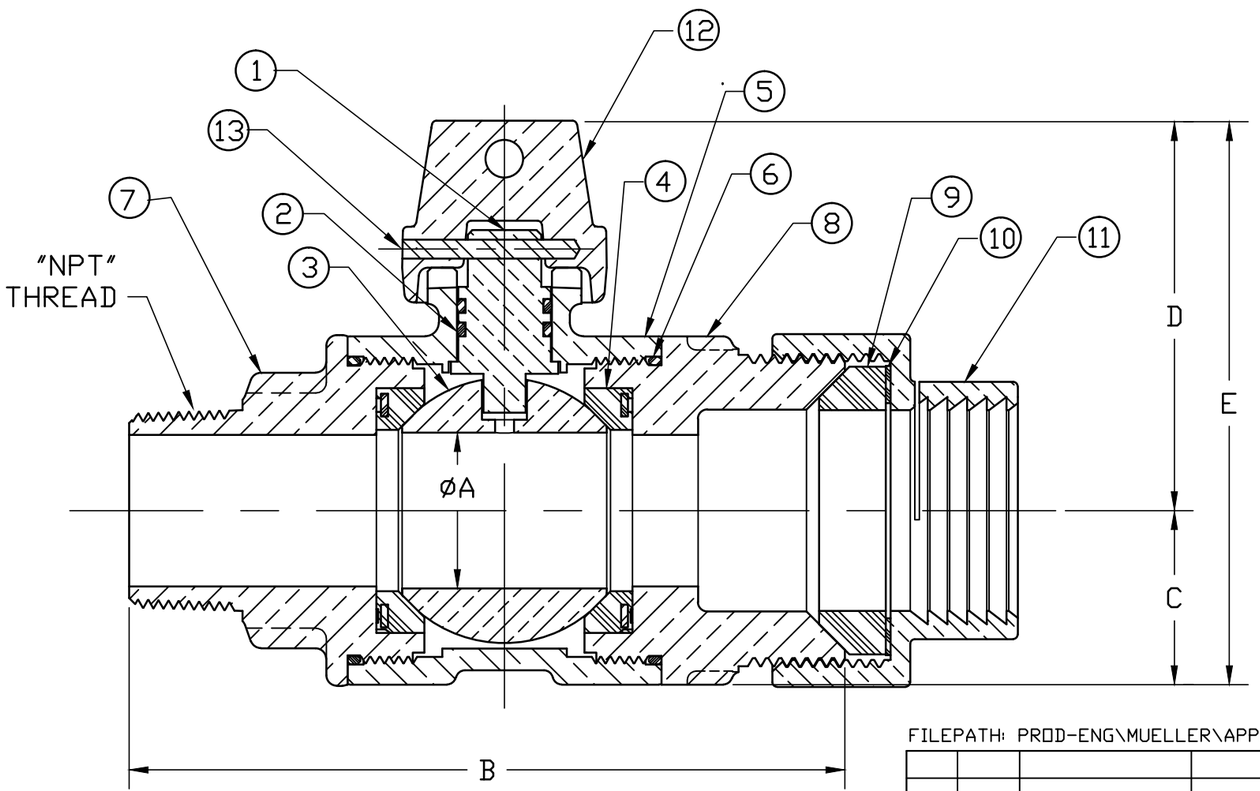

SIZE	ØA	B	C	D	D
1-1/2"	1.50	5.96	1.50	3.37	4.87
2"	2.00	6.85	1.82	3.92	5.74

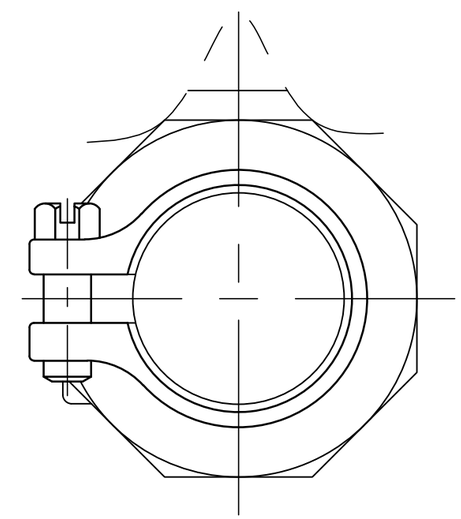

ALL WETTED PARTS ARE LOW LEAD BRASS ALLOY

FILEPATH: PROD-ENG\MUELLER\APPROVED\V25101N

REV	ECR	DESCRIPTION	DATE	BY	CHKR

PER EST NO: DXXXX EST FIN WT = 0.0000 lbs

DRFTR	jGarvin	2/8/08
CHKR		
ENGR		
MGR		
	BY	DATE
STK No:		
MAT'L:		

Mueller Co.

UNLESS OTHERWISE NOTED
SURFACE PREPARATION:
BREAK CORNER(S) ---- .000
SURFACE FINISH -- XX RMS
TOLERANCE(S):
LINEAR ---------- ± .000
ANGULAR --------- ± 0°00'

THIRD ANGLE PROJECTION

REF. No. | SCALE

DESCR. LOW LEAD BALL CORPORATION VALVE (MIP x PJ IPS PVC)

DWG NUMBER V25101N

TITLE TO AND OWNERSHIP OF THIS ENGINEERING DATA REMAINS IN Mueller Co. NO USE IS TO BE MADE OF THIS DATA EXCEPT AS SPECIFICALLY AUTHORIZED BY Mueller Co. ASSENT ON THE PART OF THE RECIPIENT TO THESE CONDITIONS IS PRESUMED

DWG NUMBER V25101N

44^2-MRKTG