ITEM	DESCRIPTION	MATERIAL DESCRIPTION
1	BODY	CAST LOW LEAD BRASS ALLOY
2	CAP	CAST BRASS ASTM B62 ALLOY C83600
3	STEM	LOW LEAD BRASS ALLOY
4	BALL	LOW LEAD BRASS ALLOY
5	GASKET	ASTM D2000 (BUNA-N)
6	SPIROL PIN	AISI 303 STAINLESS STEEL
7	O-RING	ASTM D2000 (EP)
8	O-RING	ASTM D2000 (EP)
9	END PIECE	CAST LOW LEAD BRASS ALLOY
10	SNAP RING	COPPER ALLOY WIRE CDA 521
11	SADDLE NUT	CAST BRASS ASTM B62 ALLOY C83600
12	RUBBER GSKT	ASTM D2000 (SBR)
13	BODY	CAST LOW LEAD BRASS ALLOY
14	ORING	ASTM D2000 (EP)
15	GRIP RING	CELCON M90

SIZE	A	B	C	D	E	F
5/8x3/4x1	.750	2.31	.84	3.15	3.44	2.39
3/4 R	.625	2.12	.75	2.87	3.11	2.20
3/4	.750	2.31	.84	3.15	3.20	2.20

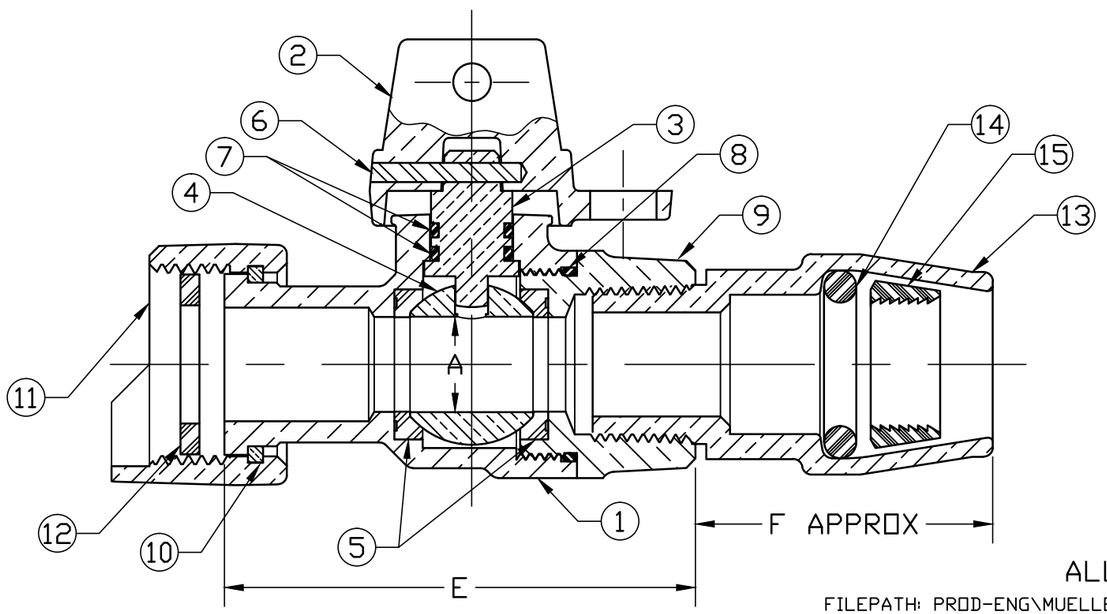

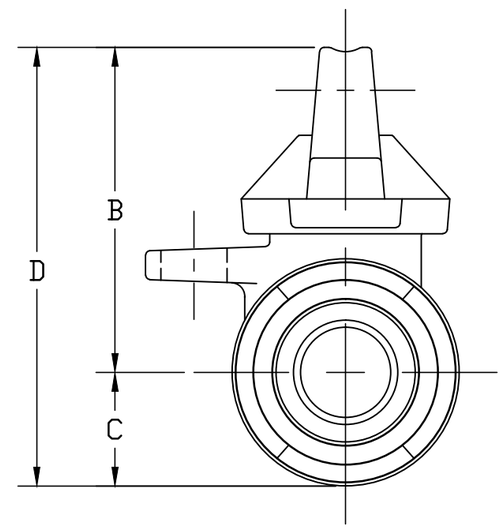

ALL WETTED PARTS ARE LOW LEAD BRASS ALLOY

FILEPATH: PROD-ENG\MUELLER\ASYSUBMITTALS\B24363N

REV	ECR	DESCRIPTION	DATE	BY	CHKR

PER EST NO: DXXXX EST FIN WT = 0.0000 lbs

DRFTR	RWB	4/3/15
CHKR		
ENGR		
MGR		
	BY	DATE
STK No:		
MAT'L:		
DESCR.	INLINE LLB BALL METER VALVE (MTR x CTS INSTA-TITE)	

Mueller Co.

UNLESS OTHERWISE NOTED
SURFACE PREPARATION:
BREAK CORNER(S) ---- .000
SURFACE FINISH -- XX RMS
TOLERANCE(S):
LINEAR ---------- ± .000
ANGULAR --------- ± 0°00'

THIRD ANGLE PROJECTION

REF. No.

SCALE NONE

DWG NUMBER B24363N

DWG NUMBER B24363N

44^2-MRKTG

TITLE TO AND OWNERSHIP OF THIS ENGINEERING DATA REMAINS IN Mueller Co. NO USE IS TO BE MADE OF THIS DATA EXCEPT AS SPECIFICALLY AUTHORIZED BY Mueller Co. ASSENT ON THE PART OF THE RECIPIENT TO THESE CONDITIONS IS PRESUMED