No.	DESCRIPTION	MATERIAL
1	STEM	CAST LOW LEAD BRASS ALLOY
2	O-RING	EPDM D2000
3	BALL	CAST LOW LEAD BRASS ALLOY
4	GASKET - SEAL	NITRILE D2000
5	BODY	CAST LOW LEAD BRASS ALLOY
6	O-RING	EPDM D2000
7	END PIECE	CAST LOW LEAD BRASS ALLOY
8	CAP	BRASS ASTM B62 ALLOY C83600
9	SOLID PIN	AISI 304 STAINLESS STEEL

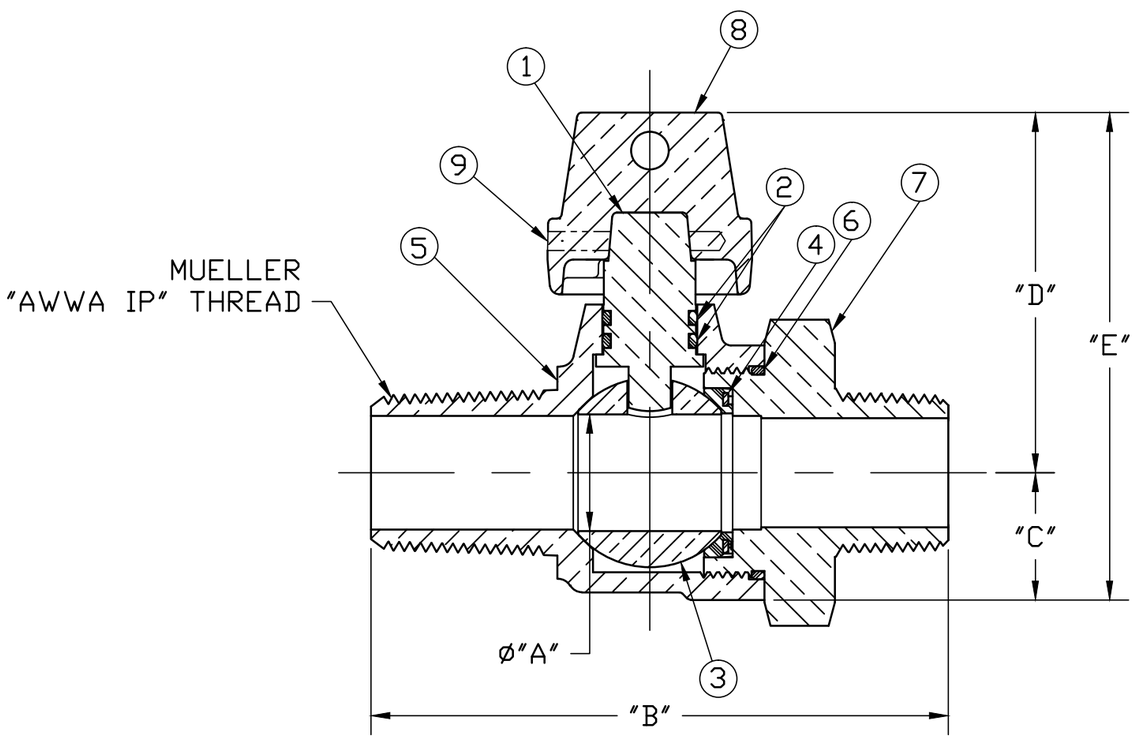

SIZE	ØA	B	C	D	E
1	1.000	4.525	1.150	2.579	3.729

NOTE: ALL WETTED PARTS ARE LOW LEAD BRASS ALLOY

FILEPATH: PROD-ENG\MUELLER\ASYSUBMITTALS\B2001310N

REV	ECR	DESCRIPTION	DATE	BY	CHKR

PER EST NO: DXXXX EST FIN WT = 0.0000 lbs

DRFTR	RWB	11/8/12
CHKR		
ENGR		
MGR		
	BY	DATE
STK No:		
MAT'L:		

Mueller Co.

UNLESS OTHERWISE NOTED
SURFACE PREPARATION:
BREAK CORNER(S) ---- .000
SURFACE FINISH -- 000 RMS
TOLERANCE(S):
LINEAR ---------- ± .000
ANGULAR --------- ± 0°00'

THIRD ANGLE PROJECTION

REF. No.

SCALE NONE

DESCR. MUELLER CORP. STOP LLB BALL VALVE ("AWWA IP" x MIP)

DWG NUMBER B2001310N

TITLE TO AND OWNERSHIP OF THIS ENGINEERING DATA REMAINS IN Mueller Co. NO USE IS TO BE MADE OF THIS DATA EXCEPT AS SPECIFICALLY AUTHORIZED BY Mueller Co. ASSENT ON THE PART OF THE RECIPIENT TO THESE CONDITIONS IS PRESUMED

DWG NUMBER B2001310N

44²-MRKTNG