ITEM NO	PART NUMBER	QTY	DESCRIPTION	MATERIAL
1	547404	2	SUPPORT BRACKET	BLACK PLASTIC ABS
2	700098-1	1	CAST IRON FRAME (PURCHASED SEPARATELY)	CAST IRON ASTM A48 CLASS 25A
3	780005-2442	1	SHELL SUB ASSEMBLY	SDR-51 PVC PIPE ASTM D2241 GRADE 1120
4	780113	1	18" DIA CAST IRON LID W/ RECESSED TR (SOLD SEPARATELY)	CAST IRON ASTM A125 CLASS B AND CAST BRONZE ASTM B584/B62 ALLOY C84400/C83600
5	790038	4	1-1/2" HEX NUT	ASTM B16 ALLOY C36000
6	790325	1	24" X 4" EZ INSULATING PAD (OPTIONAL)	ETHAFOAM 220 WHITE OR POLYLAM 1.7 DENSITY WHITE
7	094988E	2	1-1/2" 90 DEG ELBOW	CAST BRONZE ASTM B584 ALLOY C89833
8	500B242860IN	1	1-1/2" FULL PORT BALL VALVE	LEAD FREE BRASS ALLOY ASTM B584 C89833/C87850
9	500BN0500V01	2	1-1/2" BULKHEAD NIPPLE	ASTM B43 SEAMLESS RED BRASS C23000 O61 TEMPER
10	500H14244N	1	1-1/2" DUAL CHECK VALVE	LEAD FREE BRASS ALLOY ASTM B584 C89833/C87850
11	500PP2250	2	1-1/2" PIPE PART	ASTM B43 BRASS ALLOY C23000 O61 TEMPER

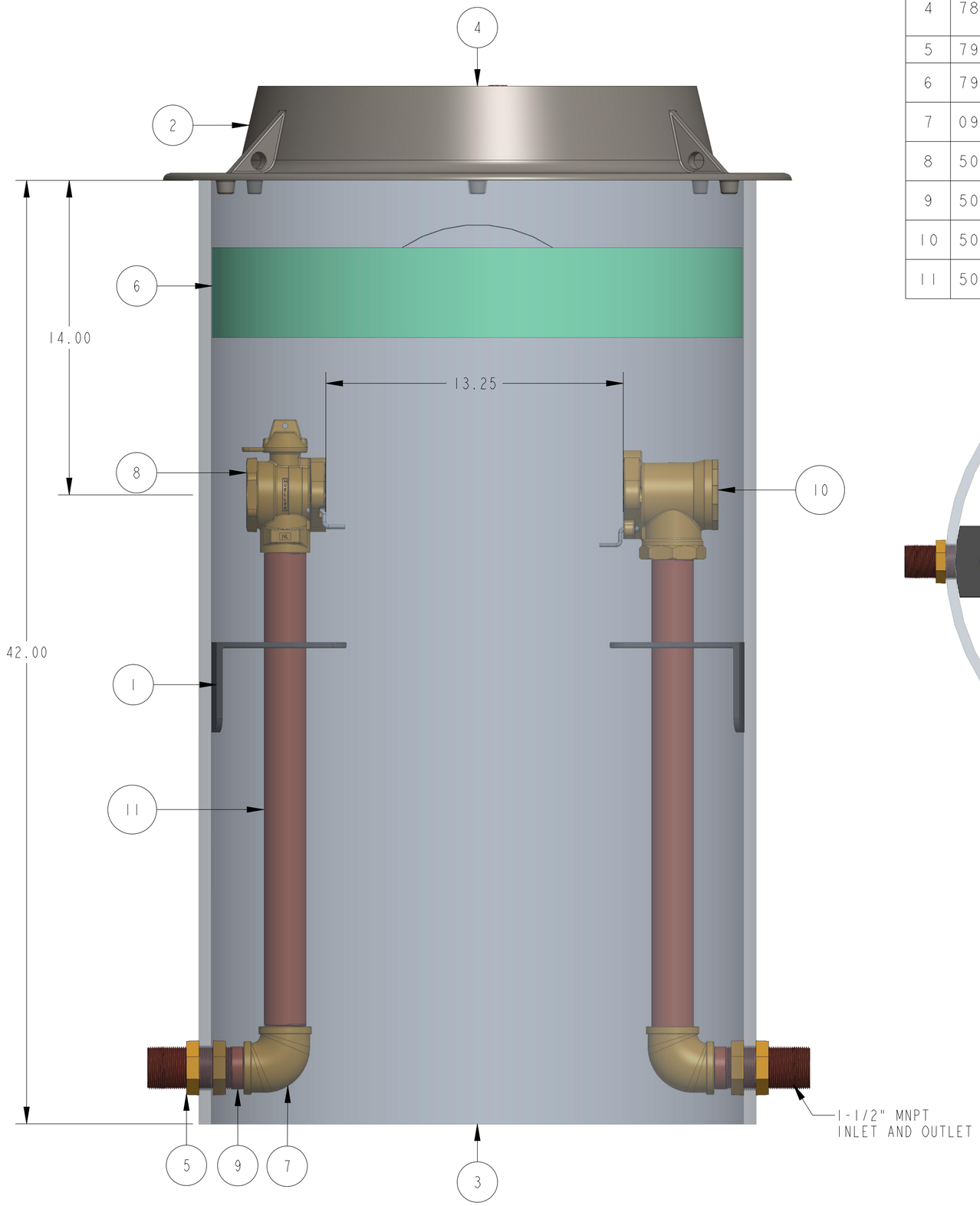

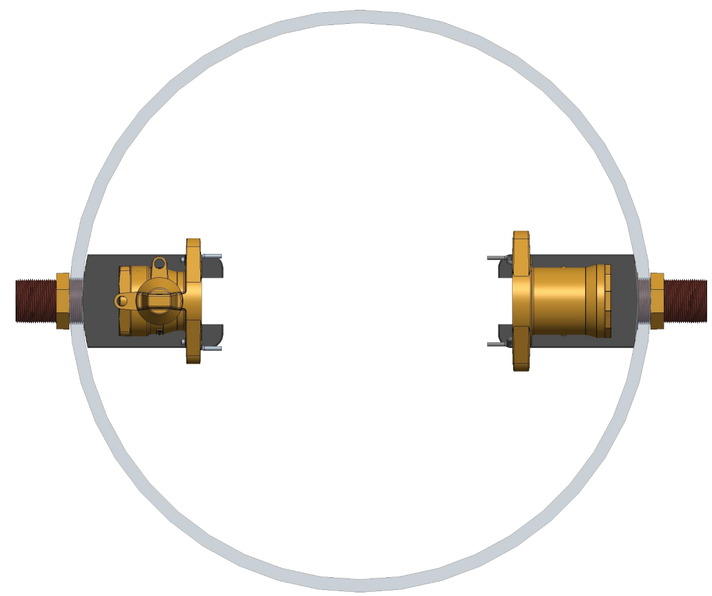

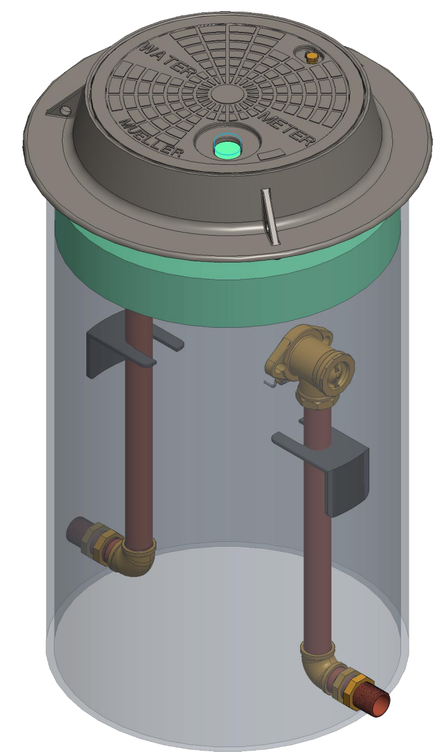

REVISIONS					
REV	ECR	DESCRIPTION	DRAWN BY	DATE	APPROVED

INTERPRET THIS DRAWING IN ACCORDANCE WITH ASME Y14.5 2018

UNLESS OTHERWISE SPECIFIED DIMENSIONS ARE IN INCHES. MACHINING TOLERANCES:

.X ±.1
.XX ±.015
.XXX ±.005

ANGULAR ±1°
CORNER BREAK .015/.025
FINISH 125 µin. RA

	NAME	DATE
DRAWN BY	AOS	Mar-15-24
D.E. APPR.		
M.E. APPR.		
Q.A. APPR.		

DO NOT SCALE DRAWING

= CRITICAL ( ) = REFERENCE

THIRD ANGLE PROJECTION

MUELLER

TITLE:

1-1/2" VAULT SINGLE METER PIT
24" DIA X 42" DEPTH
LEAD FREE BRASS

MATERIAL:

STK NUMBER: REF.NO.

SIZE	DWG. NUMBER	REV
C	500VS2442FBBN	A

SCALE: 0.250 WT: SHEET 1 OF 1

TITLE TO AND OWNERSHIP OF THIS ENGINEERING DATA REMAINS IN Mueller Co. ASSENT ON THE PART OF THE RECIPIENT TO THESE CONDITIONS IS PRESUMED.